Hacoc Emaux SB15

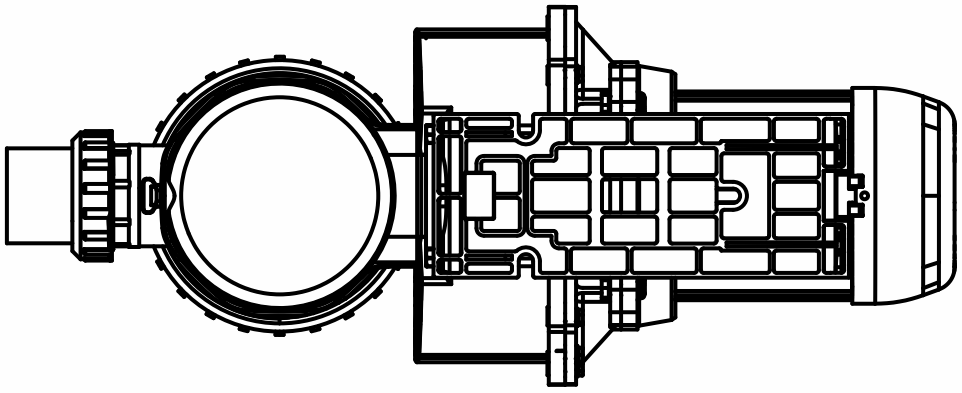

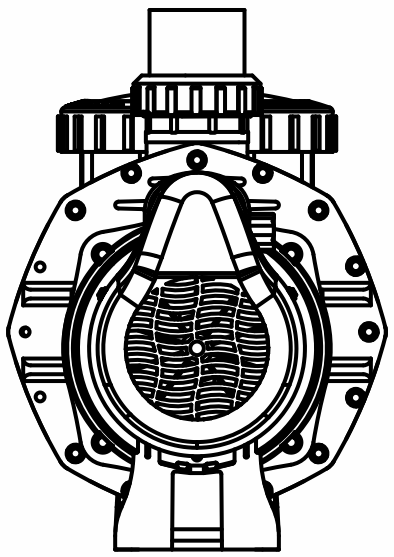

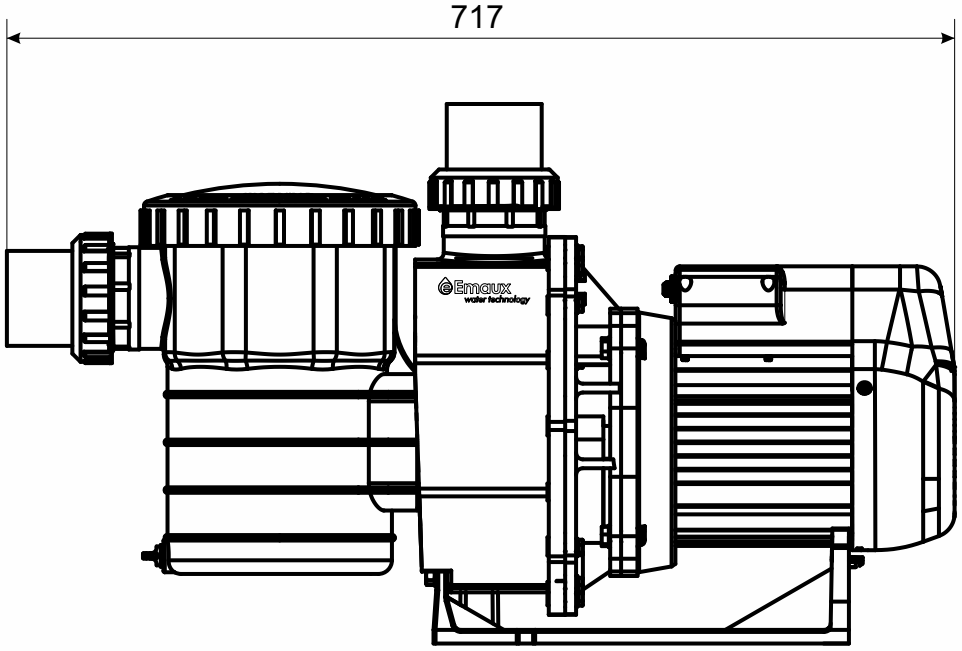

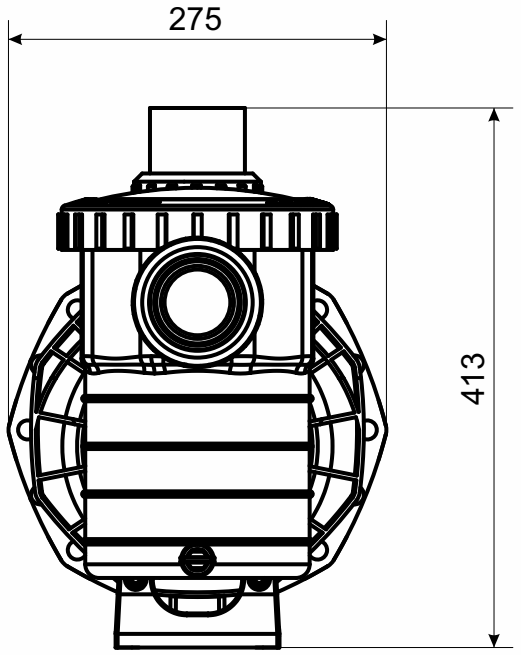

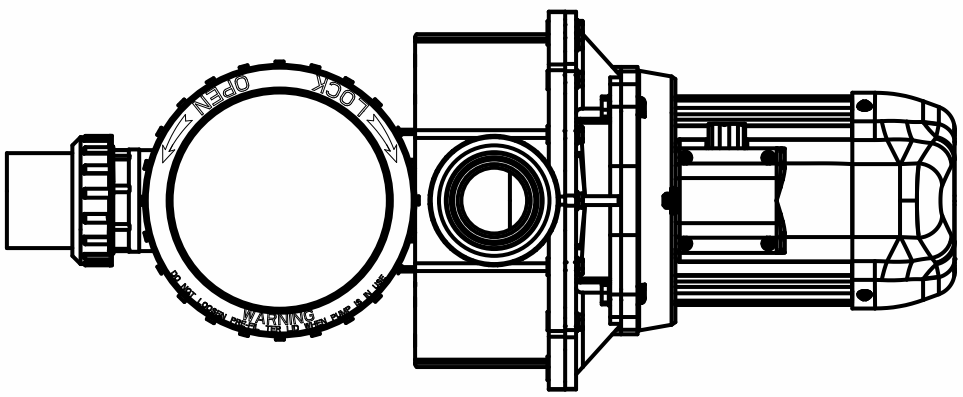

Emaux
water technology

Hacoc Emaux SB15

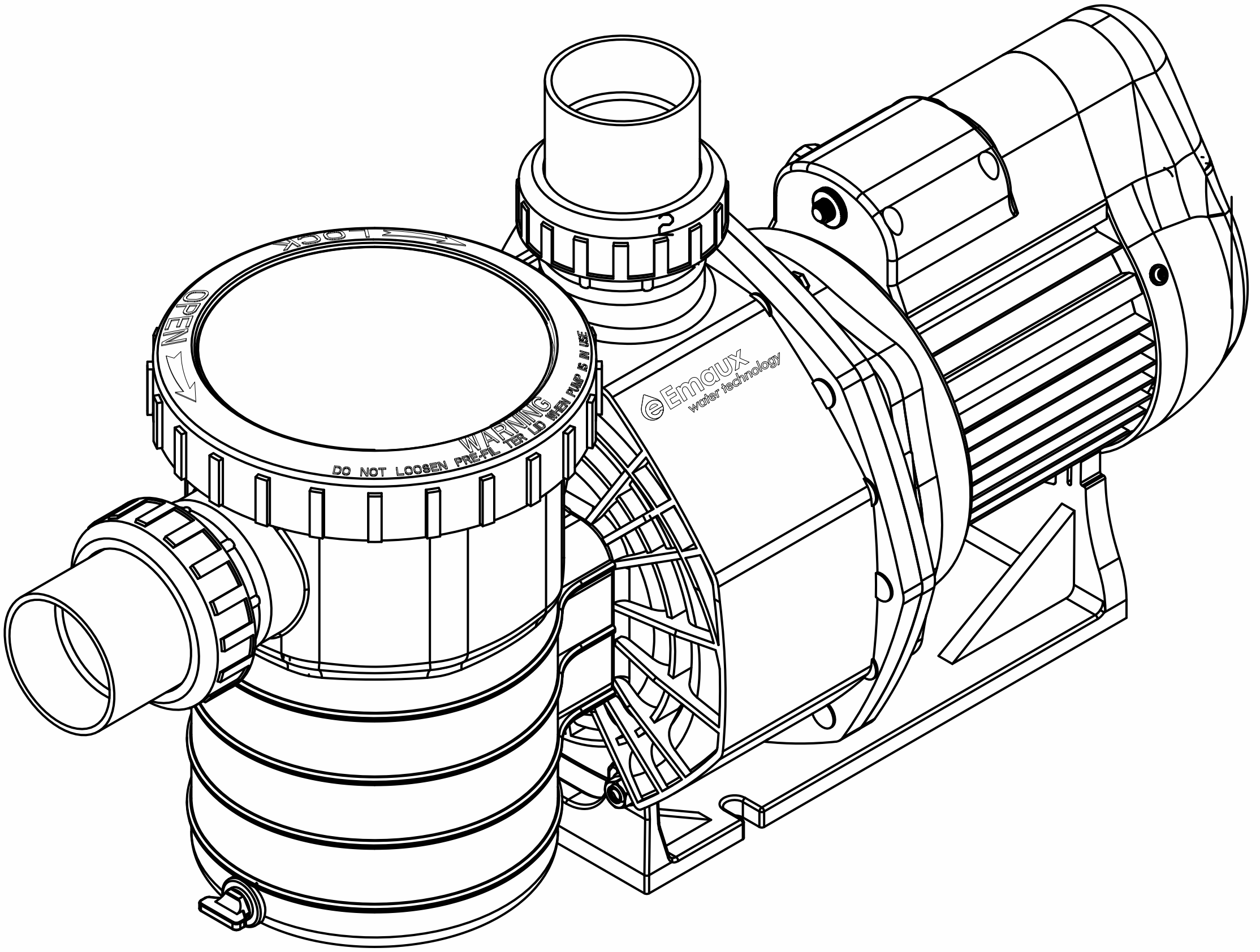

Emaux
water technology