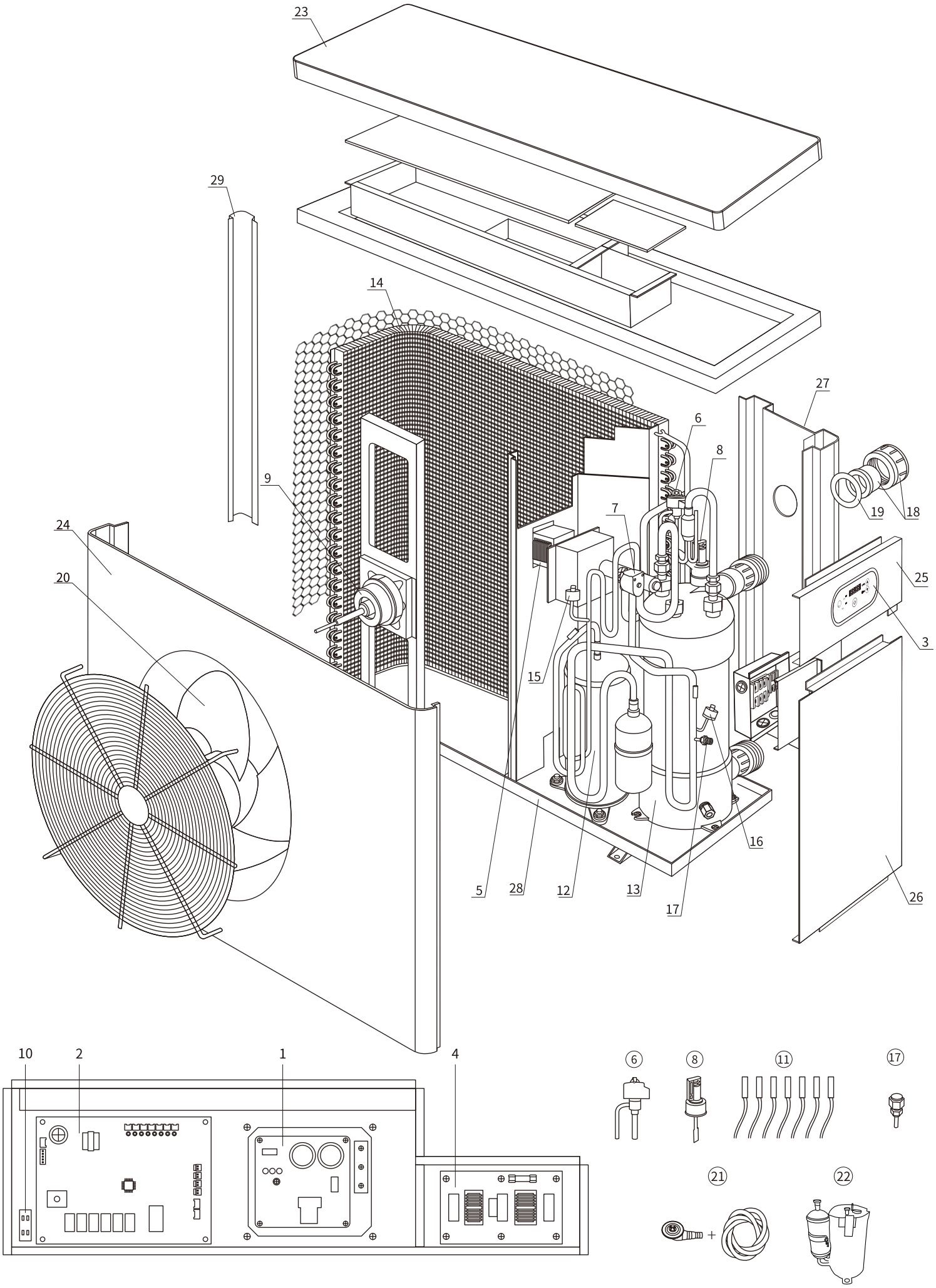
23
29
14
27
6
8
9
7
19
18
24
20
25
3
15
16
5
28
12
13
17
26
10
2
1
4
6
8
11
17
21
22

| Position | Spare parts | Part number |
|---|---|---|
| 1 | Inverter board | 033091370400 |
| 2 | PC board (Heat) | 033090310400H56 |
| 3 | Oval LED (Heat) | 034090260000 |
| 4 | Power filter plate | 033092350000 |
| 5 | Reactor | 041301090000 |
| 6 | Electronic expansion valve | 006121000001 |
| 7 | 4-way valve | 006110080001 |
| 8 | Water flow switch | 040060620000 |
| 9 | Fan motor | 032020450000 |
| 10 | Fan motor capacitor | 041010020001 |
| 11 | Full set of sensors | Z35043000400 |
| 12 | Compressor | 031034050000 |
| 13 | Titanium heat exchanger(Heat) | 001031080002 |
| 14 | Evaporator | Z01011230000 |
| 15 | High pressure protection switch | 040050630000 |
| 16 | Low pressure protection switch | 040050130000 |
| 17 | Low Pressure valve | 006080500000 |
| 18 | Water union (black,50mm) | 003990020000 |
| 19 | Water union gasket | 004980050002 |
| 20 | Fan | 007010020000 |
| 21 | Drainage kit | Z03991700000 |
| 22 | Compressor insulation cap | 004041650000 |
| 23 | Top cover | 002021300615 |
| 24 | Front Panel | 002021300315 |
| 25 | Right Up Panel | 002020621715 |
| 26 | Right Down Panel | 002020621815 |
| 27 | Back Panel | 002021301715 |
| 28 | Bottom board | Z02021300100 |
| 29 | Pole | 002020800215 |